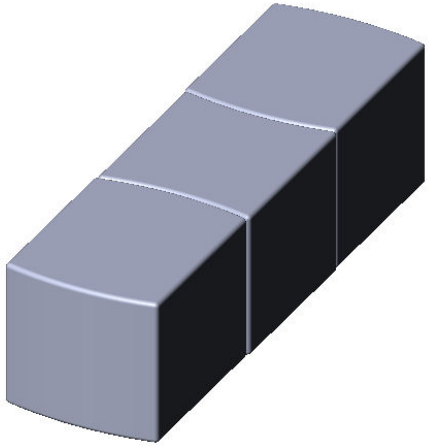

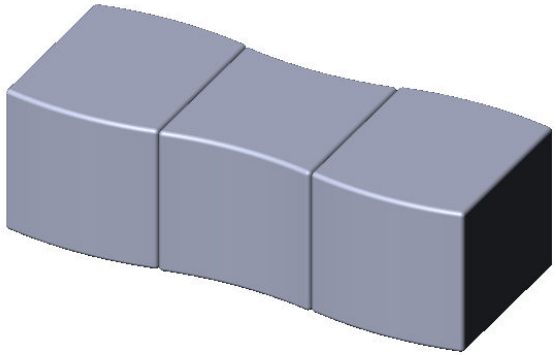

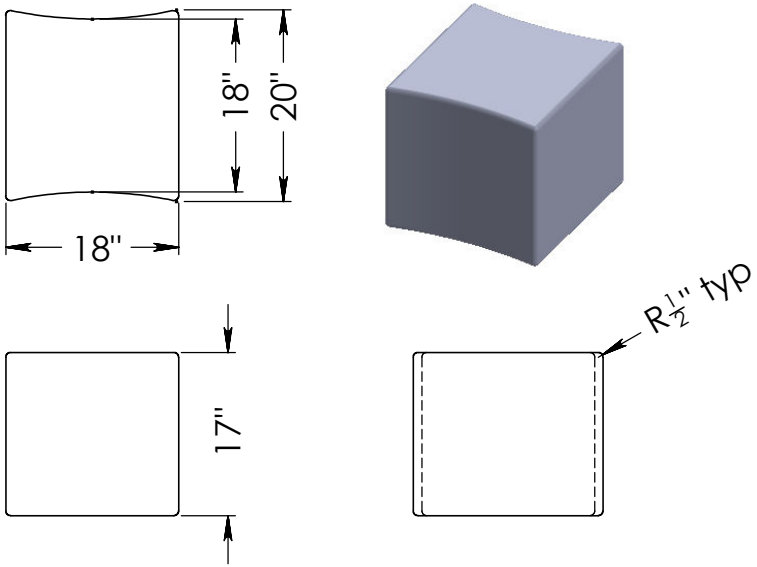

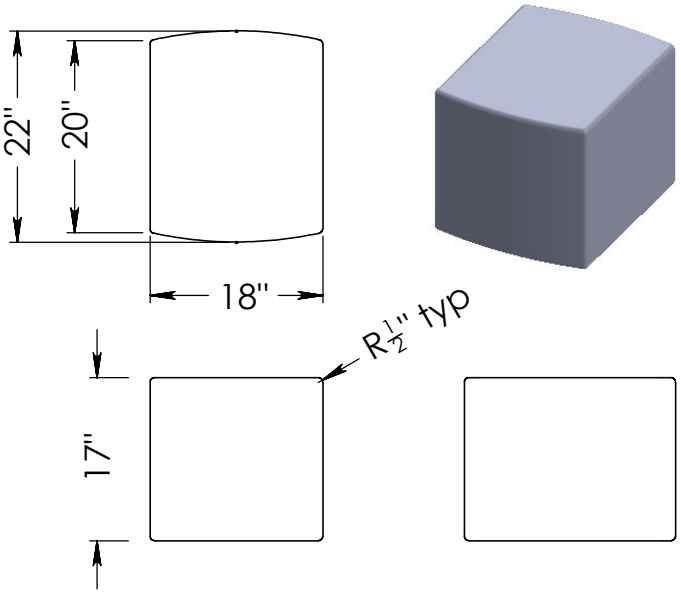

STONE FOREST

puzzle cubes

SIZE	DWG. NO.	REV.
A	puzzle cubes spec	A

WEIGHT: SHEET 1 OF 1

Due to the hand-carving of each piece, small variances in shape and size are to be expected.

DO NOT SCALE DRAWING